40W Constant Current power supply

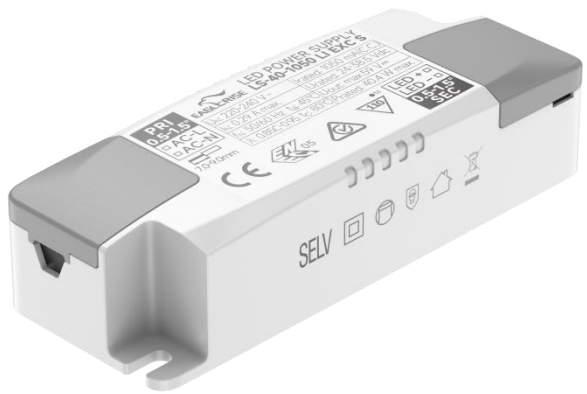

Features

- Class II，SELV，independent
- Input Voltage： 220-240VAC
- Protections：SCP/OLP/OVP/OTP
- Power Factor：0.95
- Efficiency：87-89%
- 5 years warranty
- IP20

Applications

- LED panel、LED down light
  LED spot light

■Approve

◆ Description

LS-40-XXX LI EXC S is a 40W constant current LED driver with 600 to 1050mA output current. With it's compact dimensions from 102 x 38.2 x 25mm it is easy to integrate in LED Panel, spot and down lights product. To ensure trouble-free operation, protection is provided against output short circuit, over load, over voltage and over temperature.

◆ Model code

LS-40-XXX LI EXC S

- Flicker-free
- Current
- Power
- Series

◆ Specification

Output	Constant Current (mA)	600	650	700	750	800	850	900	950	1000	1050
	Voltage Range(VDC)	24-42								24-40	24-38.5
	Unload voltage Max.	59VDC									
	Current Accuracy	±5%									
	Output HF current ripple(≥1KHz)	±3%									
	Output LF current ripple(≤120Hz)	±3%									
	SVM	≤0.4									
	Pst	≤1									
	Efficiency(Typ.)	87%						89%			
Input	Rated input voltage	220-240V									
	Range of input voltage	198-264VAC									
	Maximum voltage	300VAC@1 h maximum,unit might not operate in this abnormal condition									
	Range of input voltage(VDC)	176-280VDC									
	Frequency(Hz)	0/50/60 Hz									
	Displacement factor	≥0.9									
	Power Factor(Typ.230VAC)	0.95									
	Input Current max (mA)	170	190	200	220	230	250	260	270	270	290
	Start-up time	＜0.5S									
	No Load Power	≤0.5W									
	Standby Power	≤0.5W									
	THD (Typ.)	<10%								≤7%	
Protection	Over Load Protection	103-130%									
		YES/Auto Resume									
	Over Voltage Protection	59VDC									
		YES/Auto Resume									
	Short circuit Protection	YES/Auto Resume									
	Over Temperature Protection	YES/Auto Resume									
capability	Surge capability (L-N)	2KV									
	Surge capability (L/N-Ground)	4KV									
Environment	Operating Temperature	-20℃~+45℃									
	Humidity	20%-90%RH									
	Tc	80℃									
	Storage Temperature	-25℃~+60℃									
	Life time	＞50000h@Tc=75℃									
	Noise	≤20dB(A)@10cm									
Surface	Dimension	102X38.2X25(LXWXH)mm									
	material	PC									

Standards	Safety	GB/T 19510. 1, GB/T 19510. 213; IEC 61347- 1, IEC 61347-2- 13; AS/NZS 61347- 1, AS/NZS 61347-2- 13; AS 61347.2.13; EN62384
	EMC	GB/T 17743, GB 17625. 1，EN 55015, EN 61000-3-2, EN 61000-3-3, EN 61547，EN 62493，EN 61000-4-5; EN 61000-4-2,3,4,5,6,8,11,
	ErP	Erp2.0 EU 2019/2020
	RoHS	RoHS (2011/65/EU) (EU)2015/863
Note	1.All parameters not specially mentioned are measured at 230VAC input , full load and 25℃ of ambient temperature. 2.Ripple & Noise are measured at 20MHz of bandwidth by using a 300mm twisted pair-wire terminated with a 0.1uF & 47 uF parallel capacitor. 3.Switch and dimmer are not recommended to connect between this product output and luminaries. 4.The DC input for this product is only used for emergency lighting and applies to functional and safety requirements，EMC is not considered. 5.All Eaglerise power supply are complied with EMI regulations. Since they are belong to component and will be installed inside system enclosure. When they are integrated into a system, the EMI characteristics of the system must be re-verified again.	

◆ Model list

Number	Model number	Output			
		Current (mA)	Voltage (VDC)	Voltage No load (VDC)	Power (W)
1	LS-40-600 LI EXC S	600	24-42	59	25.2
2	LS-40-650 LI EXC S	650			27.3
3	LS-40-700 LI EXC S	700			29.4
4	LS-40-750 LI EXC S	750			31.5
5	LS-40-800 LI EXC S	800			33.6
6	LS-40-850 LI EXC S	850			35.7
7	LS-40-900 LI EXC S	900			37.8
8	LS-40-950 LI EXC S	950			39.9
9	LS-40-1000 LI EXC S	1000	24-40		40
10	LS-40-1050 LI EXC S	1050	24-38.5		40.4

◆ Inrush Current

I_{peak}	Twidth	B10	B16	B20	C10	C16	C20
28.8A	**138μs**	21pcs	33pcs	42pcs	30pcs	49pcs	61pcs

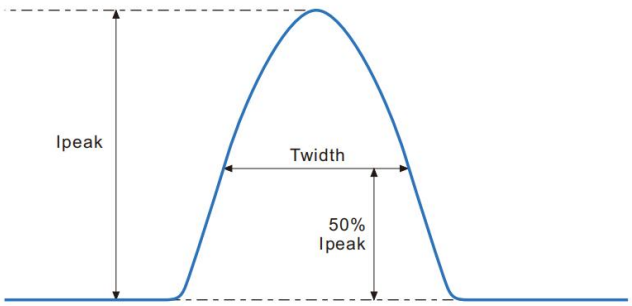

Remarks:

1.The number of drives mounted under different MCBs in the table is the maximum value. Please do not exceed this number during installation.

2.Different brands and models of miniature circuit breakers, the number of drives mounted will be slightly different.

◆ Wiring diagram

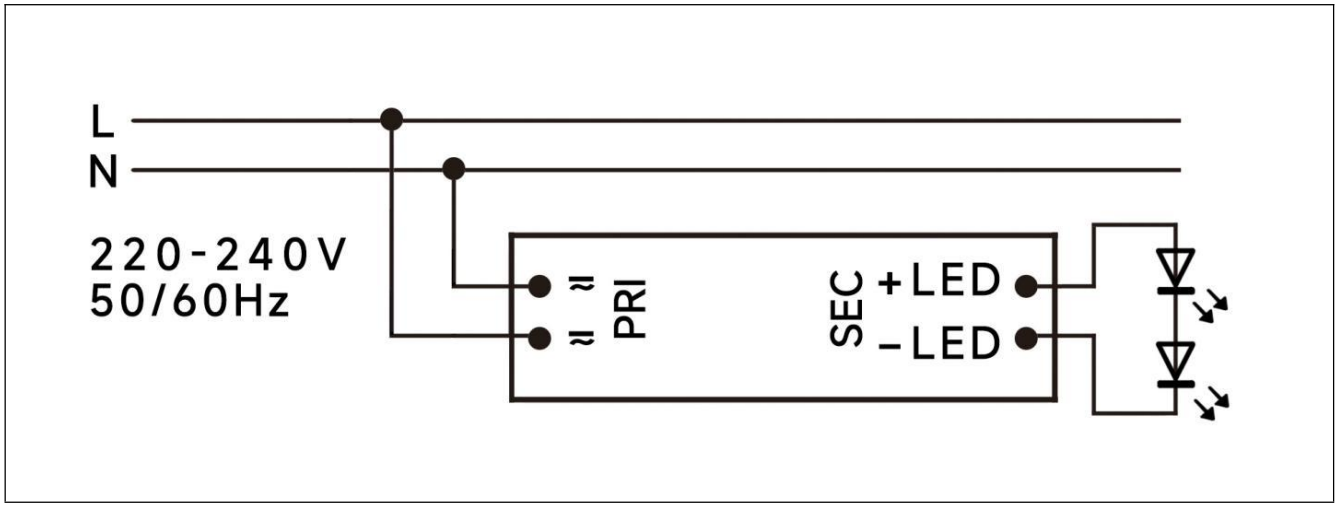

◆ 2D diagram

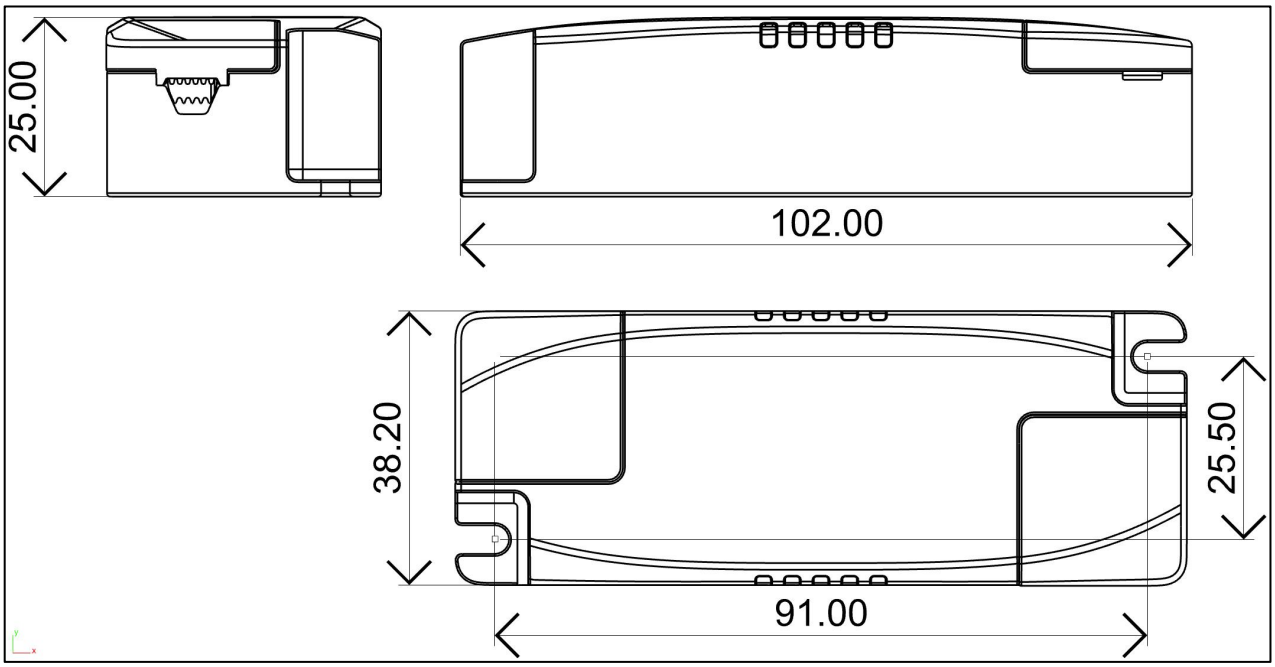

Terminal

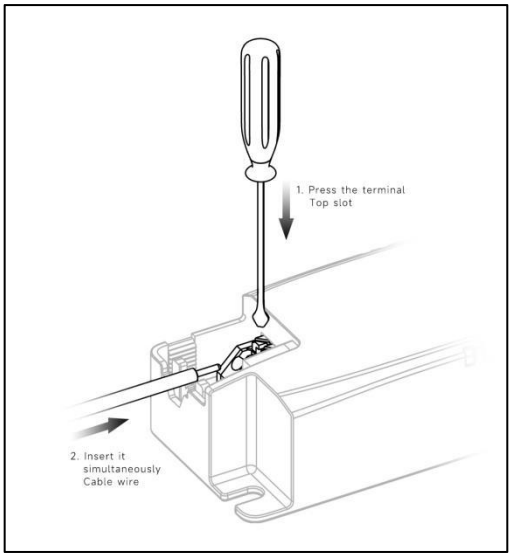

◆ Wiring & Connections

Specification item		Value (Unit)
Input	Input wire cross-section	0.5...1.5 mm^2
	Input wire gauge.	16...20 AWG
	Input wire strip length	7...9mm
Output	Output wire cross-section	0.5...1.5 mm^2
	Output wire gauge.	16...20 AWG
	Output wire strip length	7...9mm

Note:Solid wire is risky to use on an angled terminal.Stranded wire is recommended for this kind of use.

◆ Curve for LS-40-1050 LI EXC S, Io=1050mA

Lifetime vs. Temperature Curve

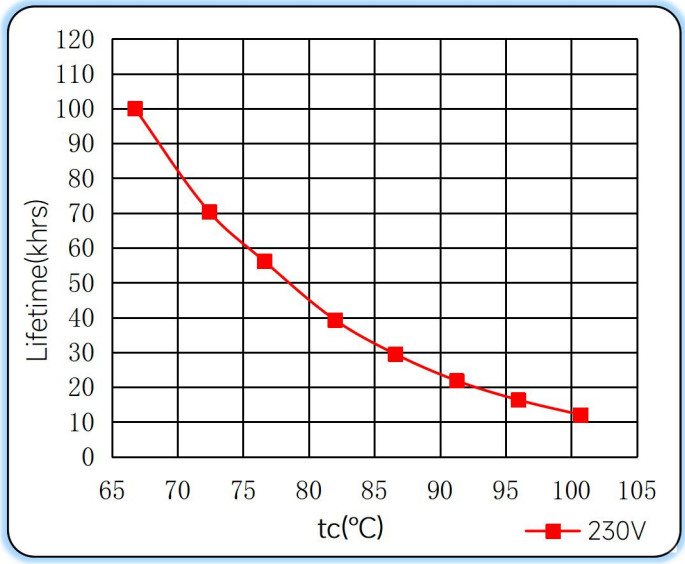

Efficiency vs. Load

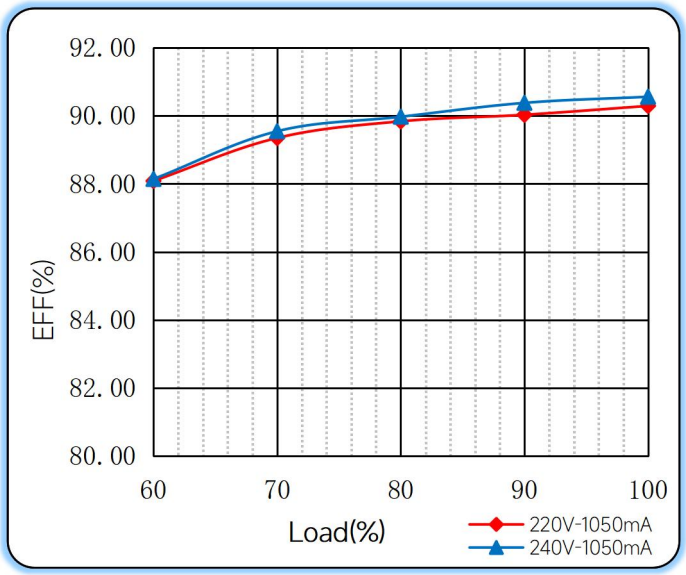

Power Factor Characteristics

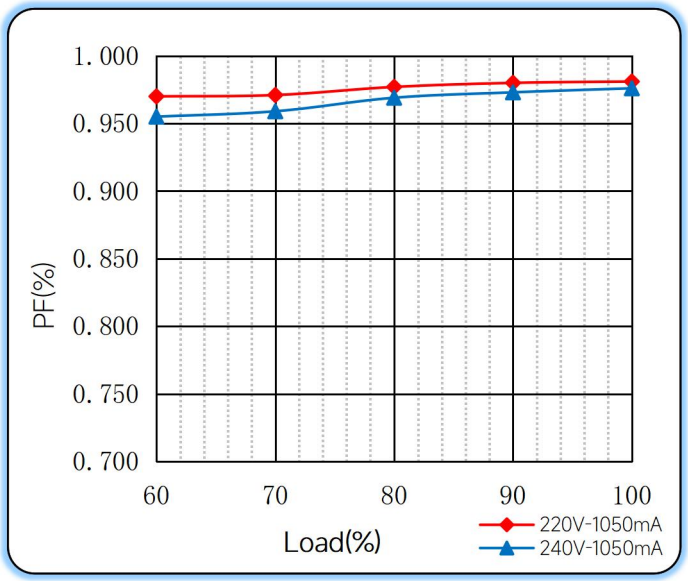

THD vs. Load

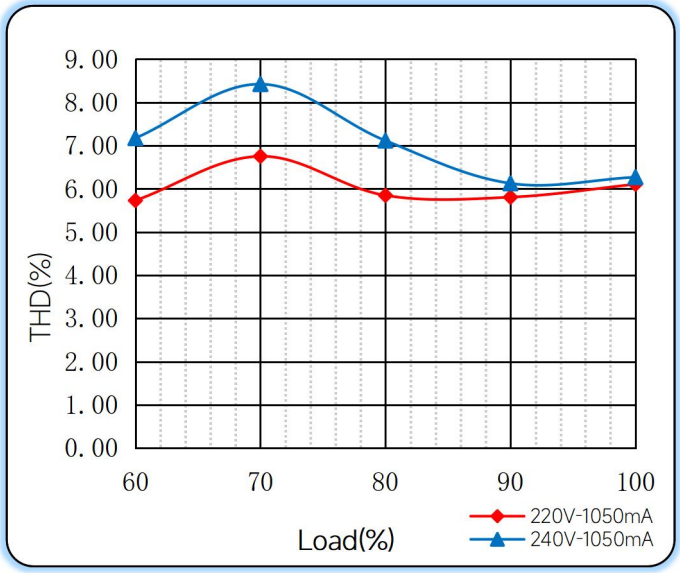

◆ Operating window

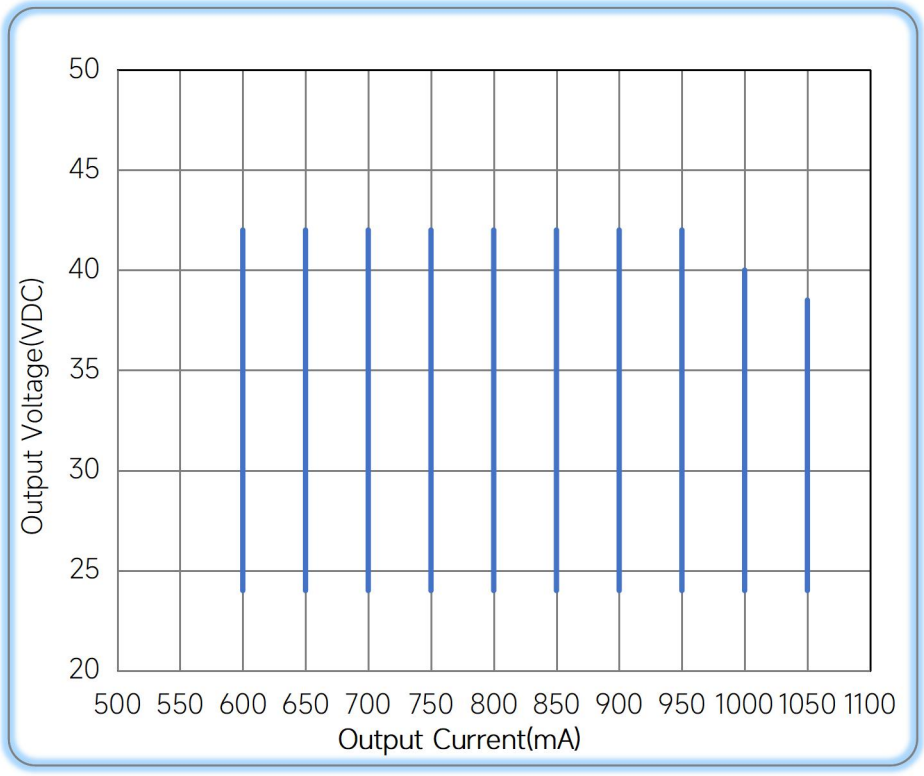

Operating window 100%

◆ Revision Updates

ITEM	BEFORE	AFTER	VERSION	DATE
Initial			A	2023/10/13
PF,Tc		update	B	2023/11/23
Over Load Protection	103-120%	103-130%	C	2023/12/26
Standards	GB 19510. 1 GB 19510. 14	GB/T 19510. 1 GB/T 19510. 213	D	2026/10/09

Remark:The final interpretation of the contents of the specification belongs to Eaglerise Electric & Electronic (China) Co., Ltd.

Tel: +86-0757-86256822, +86-0757-86256831
E-mail: sales@eaglerise.com
Website : https://lighting.eaglerise.com

EAGLERISE

Manual